Macintosh 16-inch Color Display Specs

The Bullet Chart Series
Vol. 2, Number 1, 3/23/94;
rev. 11/30/95

Phosphor type (aluminized)
P22 (R, G, & B)

Stripe pitch
0.26 mm

Phosphor CIE coordinates
Red x = 0.625 ± 0.020, y = 0.340 ± 0.020
Green x = 0.280 ± 0.020, y = 0.595 ± 0.020
Blue x = 0.155 ± 0.015, y = 0.070 ± 0.015

Input power
AC input voltage range 90-270Vrms
Input surge voltage 300Vrms for 100 ms
Peak inrush current 90 A peak
Input line frequency 47-63 hz, single phase
Input power 130W maximum

Screen luminance
24 ft. lamberts (nominal)

Sweep rates
V = 75 Hz
H = 50 kHz

Raster size
horizontal 300 mm (11.81")
vertical 225 mm (8.6")

Resolution
832x624, 70 dpi

Anode voltage
27.5 KVdc

Heater voltage
6.3 Vrms (± 0.5 V)

PIN		Signal
1		Red ground
2		Red video
3		Composite sync
4	*	ID1 (tied to pin 10)
5		Green video
6		Green ground
7	*	ID2 (No connection)
9		Blue video
10	*	ID3 (tied to pin 4)
13		Blue ground

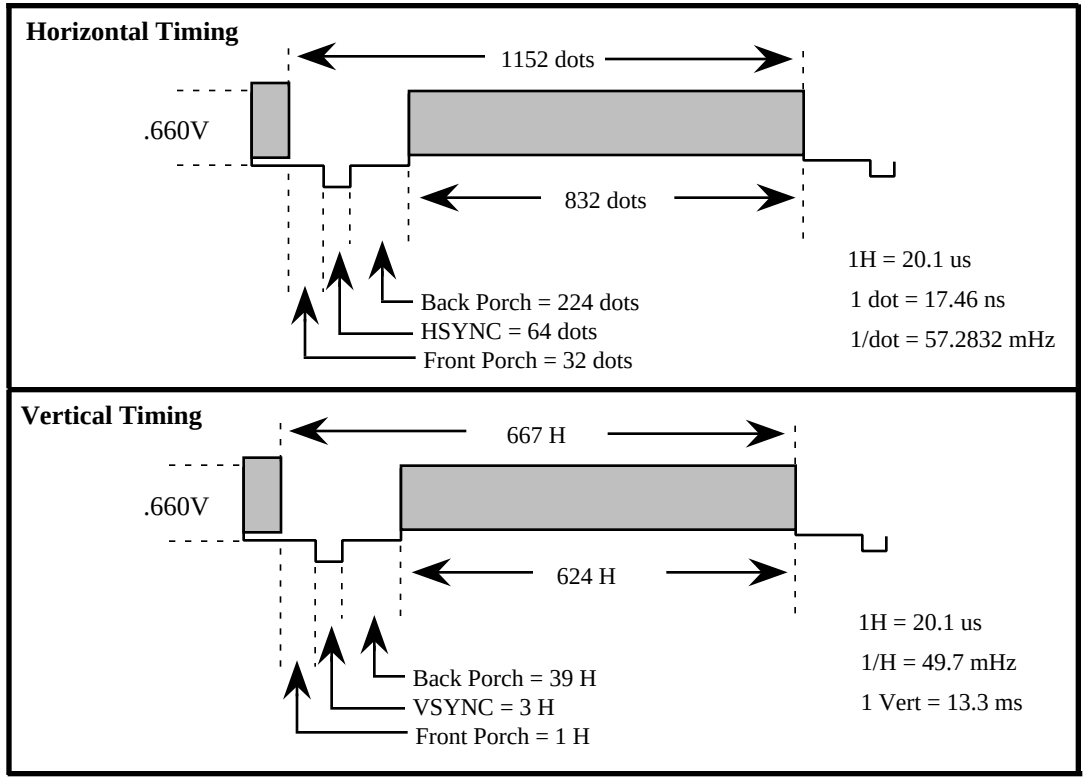

© Apple Computer, Inc., 1994. AppleColor is a trademark of Apple Computer, Inc.
Apple and the Apple logo are registered trademarks of Apple Computer, Inc.