Ryte Data.....
Dedicated to 99/4A and 9900 Computer Systems
4.00
VER 1.10/11
1986
MAR-APR
BOX 210 MOUNTAIN STREET
HALIBURTON, ONTARIO K0M 1S0
CANADA

R/D COMPUTING NEWSLETTER

LOS ANGELES FAIRE

The first annual "99 FEST-WEST '86" hosted by the Los Angeles TI Users Group was a qualified success from several viewpoints. Perhaps the most valuable result of the show was to demonstrate the continuing support for the TI 99/4A home computer. Approximately 20 vendors from all over the United States and Canada attended the show. A wide variety of products were demonstrated ranging from original TI software modules to new, innovative products developed by Millers Graphics, Digit Systems, Myarc, DataBioTics, Mechatronic, Cor- Comp and other companies.

One of the more exciting products was a new IBM type keyboard demonstrated by Millers Graphics. This full sized keyboard; with separate function, numerical and cursor keys comes with an interface card for the Peripheral Expansion Box. The keys are fully programmable with a separate 32k type-ahead buffer. In addition, Millers Graphics was also marketing their range of software, books and the GramKracker.

Digit Systems was showing a new RGB interface for the TI 99/4A which allows the use of high resolution 'Red Green Blue' monitors. This is a professional quality display interface that provides sharper images, brighter colours, better alpha-numeric displays and also eliminates the colour distortion on the vertical edges of graphics and text. The "interference noise" which results in herringbone patterns is eliminated as well. The DIJIT Systems conversion consists of a Video Decoder Interface and the RGB Conversion Kit. Some soldering is required to connect the Conversion to the TMS9918A video chip. This hardware modification is simple to

goto 2

BILL GRONOS

Upon return from Los Angeles, confirmation from Bill Gronos was waiting in the mail stack. Bill will be writing a regular column for R/D Computing each month. Plans include programs, assembly routines, system information etc. Basically whatever strikes his imagination at the time. Requests from all of you are solicited: what would you like to see over the next several months?

Following is a partial excerpt from a recent letter which indicates some of the current attitude and politics involved with copy protection.

By Bill Gronos

I see that much is still happening in the world of the 99/4A with excellent serious user articles; the type I

accomplish. Owners and dealers should have no problems performing the RGB conversion. A linear input, 80 column rated RGB monitor is required to take full advantage of this new display enhancement. Note: this interface does NOT provide for an 80 column display from the TI 99/4A. It DOES provide for readable FORTH screens and much clearer images.

Myarc Incorporated was demonstrating their Extended Basic Level IV and 128k operating system. They also had their hard disk personality card on display along with the Myarc 128k and 512k cards. Myarc also claims to have their new operating system and new compatible computer ready to show at the New Jersey TICOFF on March 15th in Roselle Park, N.J. Considerable discussion with one of their programmers revealed information that does sound as if Myarc has a **reverse engineered** operating system ready to go that does **not** violate TI's copyright. We will be attending TICOFF in New Jersey to see firsthand the state of affairs.

DataBioTics introduced their MiniWriter III, a cartridge based word processor with additional features and a built-in printer interface. This new product only requires a cassette recorder to operate. A printer and cable is optional. The SuperSpace cartridge with improved disk software is now in full production. This module offers an additional 8k of CMOS RAM memory and the Editor Assembler GROM chip on one cartridge. Software includes SuperBug II, module type program examples and other utilities. Battery backup is included for the device.

Mechatronic of West Germany via Ryte Data and T.A.P.E. Systems introduced the 128k GRAM Card which allows users to download and run any module from disk. Additional software on the card allows up to two modules to be loaded into the card under keyboard control. An on-board HEX monitor allows any memory location to be examined and changed at will. The card can be configured to act as 128k of RAM, a 128k RAMDISK or as a full 128k of G(raphics)RAM. An additional 13k is added to Basic programs. Each card can be upgraded to 512k and two cards can be installed into the PE Box.

The new TI Mouse with an icon based disk manager was also shown. Other products included Extended Basic II plus, a 128k stand-alone memory unit with built in printer port, EPROM programmer and the TI operating system book, 'INTERN'. A new 2.8" micro disk drive including the disk controller for the TI CC40 was also shown and demonstrated.

CorComp has developed a home control system using the standard BSR type modules. This approach uses the house wiring to transmit codes to lights, appliances, motors etc. You can program the device on screen to set up the control cycle and then use your computer for other tasks; the BSR controller carries on from there!

We were showing the new GPL Assembler which works with the GRAM Card and the GPL Memory Module prototype. This program is marketed under exclusive license in North America from Elektronik Service in West Germany. The GPL Memory Module contains an EPROM based program with a special GPL loader and 8k of memory for the cartridge port. This device functions exactly like TI's proprietary GROM chips us

goto 10

GRONOS cont'

preferred to write. However, Charlie LaFara kept insisting that too few people were interested in that type of article and that the typical user was "Joe Six-pack" who didn't even write BASIC programs. So, my creative ideas were frustrated.

From reading your articles, I see that other hackers have not been detered... some brilliant things are being done. When some jerk makes a disparaging remark, I instantly challenge him to a bet on some performance standard to show him just how hot the TI is when you know what to do with it.

USING THE 99/4A FOR SOUND ANALYSIS

By Bill Gronos

It's 7:30 am in a sleepy Spani town. Zaragoza is a city of night owls; Spaniards usually don't eat till 10:00pm and discos stay open to 5:00 am.

I get out of my bed, take a quick hower to wake myself up, then head for y computer. For more than a year my 9/4 has been used for little more than word processor, but today will be a e issance. From my bookcase I take lo a box of disks, breaking a fine isp of spider web that served to nchor them in place. I flip through it to see if I have the right box, noticing a disk that I had never used. That disk is the interpretor for a computer language I have never even bothered to try: Forth. It seems that I have been too busy trying to learn another language: Spanish. And since falling in lust with a se~norita named Felisa who conveniently speaks fluent English, I never got past such rudimentary and essential phrases such as, "Cerveza, for favor", "!Que Buena estas!", "?Quieres joder?". Yes, this is the right box; it has my editor/ assembler disk.

This all puts me in a slightly sad mood, because this disk reminds me of my past demi-life when I was the senior technical editor for "Enthusiast '99" magazine. At that time I was on the leading edge of 99/4 developments, being one of the first to see and play w a slew of new devices and programs for a very special computer. For almost two years now the world of the 99/4 has been passing me by, with only a single window to view it: Bruce was kind enough to put me on the mailing list for his newsletter.

This newsletter has been my only source of news for the state of the 99/4 computer. I am amazed at the devices now coming to market, which tells me that there is a core of serious, knowledgeable users who realize how powerful their 99/4's are. I remember theorizing about a GROM enulator box while sitting in Charlie LaFara's jacuzzi with a programmer from TI - now such a device is available, along with a GPL assembler to support it! The 99/4 is better supported now by third party suppliers that when TI was at their home computer height.

I have no fondness for TI as a company, for I feel they gave their loyal consumers a raw deal. What they d do for us was provide the most rmarkable collection of electronics that $59.95 could buy. They called it a home computer, but that's like calling a magic wand a swizzle stick. The 99/4 is a serious computer for people who have more than a program module mentality. A testament to its power is an observation made by Jack Carrel, who also used to write for "Entusiast '99" but is now testing nukes in Nevada. He went for a job interview with TI and they gave him a tour of one of their plants. He said they used many 99/4s to control various phases of plant operations.

I thought my computer article writing days were over. My last effort was a phamplet titled "The Hidden Powers of Disk Fixer", which a company in California hired me to write for one of their software packages. The end of my career did have it's good points: no more staying up to 3am two days in a row to meet publication deadlines. But now Bruce has dragged me back to my Editor/Assembler module, and once again I am fighting to get an article finished while the world of fun and frolic flirts with me through my window.

Let me preview what my articles will be about for those of you who aren't familiar with my previous writings. I am not a hardware guru; my strong suit is 9900 assembly language, which I taught myself using a Mini-Memory module, and an Editor/Assembler manual that I borrowed from LaFara, who was the president of the International 99/4 User's Group; a company which went bankrupt following TI's decision to stop marketing home computers. I was too cheap to shell out over $1000 fr a disk drive, memory expansion and E/A package. This was probably a stroke of luck, because it is so much easier to learn assembly language with the Minimemory, since it blares a nasty beep at you as soon as you type in one illegal character of a program line. With the E/A you have to load the editor, create a file, save the file, load the assembler, puzzle over sme mysterious error messages, reload the editor... Of course, that was during the bad old days before tutorials existed. Hopefully, my programming articles will balance out all the hardware tips and projects.

I don't want to just give you some "gee whiz" coding to be typed into your console without knowing the foggiest idea of how it works. I hope to give you the tools that you can add to and modify to extend the power and usefullness of you computer. And, hopefully, I can make it kind of fun.

What I do best is play and experiment. I like to amuse myself by finding novel things that can be done with my computer. The goal is to create something that gives me a "cranial orgasm". I had a lot of fun with Basic, but when I started typing in the magic incantations of assembly language, I became multiorgasmic and felt the earth move. This first article for the R/D Computing newsletter will share one of my very first such orgasmic experiences: using the 99/4 for primitive voice recognition WITH NO ADDITIONAL HARDWARE REQUIRED.

I started out by reading the input of pin 30 of the TMS 9901 chip that is used within the computer console to read data from cassette tapes. Instead of a program tape, I would play music and note the changes in the logic state of pin 30. I concluded tha the logic state changes when the audio wave form changes from positive to negative, and that the time that the pin took to change states was proportional to the wave length of the sound. From there I progressed to displaying the changing pattern of wave shapes on my monitor. I would play different music passages and sit in fascination as my favorite pieces gained a visual component. One of the most interesting displays was produced by the heavy bass bell gonging in "Tubular Bells", by Nike Oldfield. I have watched music displayed on an oscilloscope, but it was no where near as fascinating as this. The next step was voice analysis.

Most cheap cassette players have a monitor function that lets you listen t what you are recording through the eaphone. I put a blank tape into the player, set it on record and spoke into the built-in microphone. From there I did an analysis that allowed me to say "stop" and "go", and the computer could discriminate between the two words. Talk about cranial orgasms, I had the stuff coming out my ears! This was before Milton Bradley came out with their voice recognition computer games.

I excitedly showed this to Charlie LaFara, but he wasn't impressed. He told me I wasted my time on cranial orgasms, and I should spend my time writing a computer game. Like most of my computer discoveries, I never put this to any practical use. I hope you will have as much fun with it as I did.

The first program listing, Sour Analyzer 1, is one of my very first assembly language programs. It was a milestone for me, for I had transcended a frontier and was exploring a new realm of exciting uses for my computer. To use it, attach a cassette player to your computer as if you were going to load a program, but instead play a music tape. Your screen will be filled with patterns of characters, and in effect you will be seeing the music. Instrumental music works the best, for it will let you discern individual instruments withing the patterns.

Your eye may not think so, but program 2 is an improvement. It bypasses the built in video access routine to give a significant increase in speed. The patterns now represent about 1/100 of a second of the sound you are hearing, and your eyes have trouble following the rapidly changing patterns. We need this speed increase to improve the resolving power of our program for future uses.

Program three adds only a minor change: two lines of coding that let you freeze the pattern as long as the function key is depressed. Try playing different types of music while tapping the key. The regularity of the patterns can easily be seen.

This simple bit of coding is the building block for many powerful programs: voice analysis, speech recognition, accessing your computer from any phone that has push button tone capability, using the computer to drive a disco light show, etc. Your computer has become a laboratory for examining the world of sound. Play with these short programs until my next article, for now I have to pack a suitcase and catch a bus to Madrid at 6:15am tomorrow morning, where I'll be spending a week working on my real job.

If you wish to write to me from North America, my address is:

PSC BOX 4619
APO NY, NY 09286-5375

For those of you who may be writing from somewhere else in the world, my home address is:

Plaza San Francisco 5, esc dcha, 2 dcha, 50006 Zaragoza, Spain

```
**********************
* SOUND ANALYZER 1 *
**********************

* DISPLAYS SOUND INPUT FORM CASSETTE
* IN VER ON MONITOR SCREEN

      REF VSBW *REFERENCE VIDEO WRITE
      DEF RUN *DEFINE PROG START
RUN   CLR 0
B     LI 1,>1E00
      TB 27
      JNE C
      AI 1,>100
C     BLWP @VSBW
      INC 0
      CI 0,>300
      JNE B
      JMP RUN
      END
```

```
**********************
  SOUND ANALYZER 2
**********************

* THIS PROG USES DIRECT VIDEO MEMORY
* WRITE TO IMPROVE DISPLAY SPEED

      DEF RUN
* PREPARE VDP MEMORY FOR DIRECT WRITE
RUN   LI 2,>40 *SET REG 2 ADDRESS 0
A     LI 0,>300 *RESET SCREEN COUNT
      MOVB 2,@>8C02 *SET LOW BYTE
      SWPB 2
      MOVB 2,@>8C02 *SET HIGH BYTE
      SWPB 2
* READ AND DISPLAY SOUND
B     LI 1,>1E00 *>1E IS BAR CHARACTER
      TB 27 *TEST SOUND INPUT
      JNE C
      AI 1,>100 *CHANGE TO BOX CHAR
C     MOVB 1,@>8C00 *DISPLAY CHAR
      DEC 0 *DECREMENT SCREEN COUNT
      JNE B *JUMP IF SCRN ISN'T FILLED
      JMP A *RESET SCREEN
      END
```

There you have it. The start of something new by Bill Gronos.

On that note; there is a new game for Commodore systems called "Hacker" which opens up with the message: 'Please logon'. Thats it!

```
**********************
* SOUND ANALYZER 3 *
**********************

* ALLOWS FREEZING OF SCREEN BY PRESSING
* FUNCTION KEY

      DEF RUN
RUN   LI 2,>40
A     LI 0,>300
      MOVB 2,@>8C02
      SWPB 2
      MOVB 2,@>8C02
      SWPB 2
B     LI 1,>1E00
      TB 27
      JNE C
      AI 1,>100
C     MOVB 1,@>8C00
      DEC 0
      JNE B
D     TB 7 *TEST FUNCTION KEY
      JNE D *IF PRESSED GOTO D
      JMP A
      END
```

Next: putting your speech synthesizer INSIDE your console.
From Peter Shubert TISHUG Australia:
Here is another internal mod for your console. NOTE: Do not do this or the 32k matchbox expansion if you would like to add an INTERNAL Disk Controller in the future as this product is being designed now and will require all the internal space and may include the 32k memory.
First you must remove the speech board from the plastic case and metal cover. Remove the female connector from the speech board by lifting each contact from the board with a small screwdriver while at the same time applying the soldering iron tip. Don't try to do more than one contact a a time.
When all contacts on both sides of the board are loose, the connector should cme free with a little rocking back and forth. Now you have a clear area to attach the ribbon cable.
I separated about 40mm (1 1/2 in.) of the end of a length of 16 wire ribbon cable. This can be separated in the middle for two lengths of 8 wire as there are 8 wires used on each side of the board PLUS an earth (ground) wire on the bottom side on pin 21. An extra wire is needed for this.
Solder wires to the contacts shown below:-
TOP 2 12 34 36 38 40 42 44
BOT 1 3 5 19 21(GND) 35 37 39 43

Next attach some double sided tape to the underside of the board where it is fairly smooth. Two small pieces may be best for good support. This will mount the speech board onto the metal cover of the main console board. The two 8 wire ribbon cables must go to the I/O port connector without obstructing access to the connector (so that other accessories can still be plugged in). I did this by running the ribbon cable under the metal cover at the sides of the main borad, one at each side of the I/O connector and soldering each wire to the very inner end of the connector traces. Strip only the minimum of insulation from the end of each wire and insure that the metal covers still fit. You will have to judge the correct length of ribbon cable so that the speech board fits in an area above the main board THAT IS FREE OF OBSTRUCTIONS when the main board is mounted back into the console case. If the 32k memory expansion is not already fitted then I would mount the speech at the other end of the main board from the I/O connector so that the 32k can still be added later, close to the module port extender.
Now chech all your wiring again and ensure that pins 1 and 2 are wired on the correct end of the speech board and I/O connector. Neat soldering is a must. You can now test it out.
If you do not get a master screen when you turn on the console then you obviously did something wrong. Check the wiring. If you cannot see the fault, start disconnecting wires till you get a master screen.
****
IF YOU ATTEMPT THIS MODIFICATION, YOU DO SO AT YOUR OWN RISK!!!
****
The speech should function normally just as it did plugged in externally. I have used my modified console with 32k and speech for some time now and have found no problems with then or any programs run on my system, which has the PE Box attached. I have a TI 32k card but I do not use it now. With the 32k in console, I find that can switch my PE Box off after loading a program.

REVIEW

We received a demo program of "DEATHWHEEL" from Foxware (see last issue). This is a new adventure game that runs under the Scott Adams Adventure Module - disk or cassette.

Must say this is a refreshing change from most other adventure games. re logic and deduction. Rather than running around trying to score treasures and fight monsters (etc.) the point is to complete the game by finding the culprits in the plot and survive the trials & tribulations encountered.

The game opens up with your arrival on the largest space station: Satellite Ecology Corporation's GREENWHEEL as a famous computer consultant. Your mission is to figure out what has gone wrong on the station - a case of terrorist blackmail. The station is shaped like a large wheel with various sections and a large ecology dome in the centre.

This game is an Advanced adventure - it will tax your deductive logic fully! If you are an expert adventurer, go right ahead - your skills will be used to their limit. Scores and treasures are NOT the objective: part of the pleasure here is in figuring out the goal and how to achieve it! Being in the right place at the r ht time is essential.

The introduction book describing the game is well done. It includes hints and tips along with a nice NASA print of a torus space station. The front cover is also a work of art - showing the interior of a habitat in the station.

"Remember that the future of Greenwheel, the future of space colonization and your own life depends on you! Go with our best wishes!" In fact, go for it adventurers.

Deathwheel was written using the Adventure Editor program by Marcus Weiand. Available from:
FOXWARE, 1853 Newton St.,
Las Cruces, New Mexico 88001
$10.00 Cassette $12.00 Disk

HORIZON

Between LA and NJ shows, there hasn been enough time to finish the Horizon RAMDISK. The board is sitting out in the shop half done. No problems thus far. Also waiting for some extra parts to come in that were not on hand. Sigh.

CorComp Cursor

SS 5 FEBRUARY, 1986

MAKE YOUR HOUSE SMART WITH THE

BITS & CHIPS
23637 Hwy. 99
Edmonds, WA 98020
775-7390

99HOME SENTRY

CorComp's 99 HOME SENTRY module has redefined the term "home computer". This exciting program will allow the power of your 99/4A Home Computer to automate your home and save you money!

CorComp, Inc., in cooperation with the world's leading manufacturer of timers, X-10 Inc., has added the 99/4A Computer to the list of personal computers being used to automate homes across the nation.

X-10, the world's leading manufacturer of home control devices has introduced the X-10 POWERHOUSE System which will interface between your 99/4A computer and CorComp's 99 HOME SENTRY to provide home security,safety, energy conservation and convenience of home automation.

Simply load the Home Sentry module, plug the accompanying cable into the **joy stick** port of your 99/4A and to the Powerhouse X-10 interface! This remarkable concept does not require any expansion of your 99/4A Home Computer!

SECURITY - Program your home to deter intruders while you are not there. Fill your home with activity as the yard lights, living room lamps, the radio or TV all automatically come on at predetermined times. You can control light levels and vary the sequence of activity throughout your home giving that "lived in look"!

CONVENIENCE - Your computer, 99 HOME SENTRY and the X-10 can awaken you with stereo music or TV news, light your bedroom, hallway and bath; turn on the heat; brew your coffee and make your toast all before your feet hit the floor! The comfort of the automated home is yours today!

ENERGY SAVINGS - We have all heard the Energy Commission implore us to more efficiently operate our appliances, cool and heat our homes. With the HOME SENTRY and the X-10 system, automatic conservation means a reduction in utility bills and increased savings to you!

MECHATRONIC GmbH

We met with Manfred Wilhelm at the LA Fest-West '86 to discuss current products, future plans and new developments for the TI 99/4A. Mechatronic has several interesting resources "in-house" which allows the company to bring new products out in a short time frame. The TI market has basically been "adopted" by the West German company Mechatronic.

Henri Schlereth of Houston, Texas also met us at the L.A. Show. He had just completed the GRAM Card documentation in English - top notch work! Henri will be doing most of the Mechatronic translating from here on in. Faster service, more accurate documentation, understanding of TI 99/4A systems and we get it SOONER rather than later. Had a great time at the show. It is really nice to meet people that we've been working with long distance.

As of next month, Mechatronic is going into production with the 128k memory & printer port on a Peripheral Expansion Box card.
Next we will have demo units of their 80 column card by mid-May. Production should be fully implimented by June 1986. Best of all, this 80 column display features a 9938 video chip (the one written up in Computer Shopper by Randy Holcomb); 256 colours & 256 sprite colours, 256 x 208 pixel resolution, 192k of video RAM, RGB or composite monitor output AND compatible with all TI software - including TI Basic. Assembly code will access this video display/memory directly. Packages such as TI Writer and MultiPlan will have to have their display windows rewritten on the disk to be compatible.
At this point we are discussing the software updates with a couple of programmers capable of re-writing the disk files. Now, one important point: the 80 column display interface will NOT be built for the PE Box first. It is being designed to fit into the 128k stand-alone memory unit as pictured in issue V 1.6 and shown in LA and NJ. This is due to the fact that a cable to intercept signals from the 9918A video chip is required. Mechatronic dealers will be able to fit this card to your console. More details to follow as we receive updates.

WE WANT DIRECT AND IMMEDIATE COMMENTS ABOUT THIS. You say you can't live with a gadget between your console and your interface cable?... You'd rather see a unit that sits on TOP of the console?... black, silver or beige?... You get the idea!

Just for reference:

ALL PRODUCTS CARRY A NINETY DAY WARRANTY.
RYTE DATA IS PROVIDING A 48 HOUR REPAIR OR EXCHANGE SERVICE.
All products will be serviced here in North America.

In progress is a project to provide a new inexpensive disk controller and disk drive. To encourage the TI 99/4A market requires state of the art disk drive systems that are comparable to the performance and price available for other machines. We have been authorized to locate hardware and software designers capable of producing a new DDC which will handle single sided, single density all the way up to dual sided, quad density disk drives. With good fortune, the unit will also incorporate direct memory access (DMA) for fast disk operations. Two designers have been contacted which are willing to work on this new project. Look for further information in the near future.
Corresponding to this is the project mentioned by Pat Saturn of MicroStuph. We are negotiating to have this new peripheral expansion box manufactured in quantity by Mechatronic. Such a PEB would allow owners to upgrade to a box that would have a built-in disk system and will hold five standard TI cards for additional features.
Hard core TI users might want to look for the standard TI PE Box to hold seven cards in addition to the system interface. After all, one box here has six cards total; add the Horizon RAMDISK and another 512k GRAM Card and it is FULL.

NEW PRODUCTS:

Due for imminent release is a new BASIC COMPILER. The documentation has to be finished, but that's about IT! More news next issue on this product.

Another new program due for release is "Super Clock Support" for owners of

from Mechatronic

New 128k/512k RAM/GRAM CARD

the ULTIMATE EXPANSION for the TI 99/4A

The most innovative expansion card ever designed for the TI 99/4A. This peripheral expansion memory card gives you new features, more power and control than ever before. Your computer can now perform tasks beyond all limits. It is packed with unique functions; to transform your 99/4A.

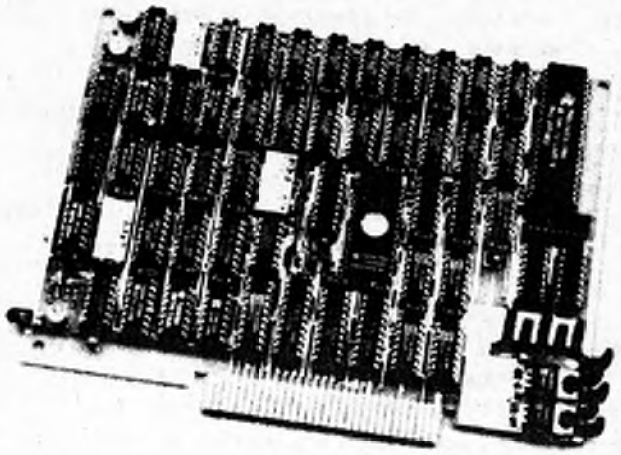

Features:

- > 128k RAM/GRAM memory • 64k RAM and 64k GRAM
- > Expandable to 512k • Two = 1 megabyte RAM
- > Use "Load" files for custom system operation from main menu screen
- > Add an **extra** 13k to Basic programs
- > Load and run assembly programs
- > Load and run GPL programs
- > Save GROM modules and programs to disk
- > Save ROM programs to disk
- > Load and run ROM/GROM programs
- > Load console GROMS 0-2 into the GRAM card, modify the 99/4A console operating system for new features!
- > Menu access up to 8 choices (modules. etc.) from main screen
- > Hex monitor allows you to change CPU, VDP and GROM memory directly from keyboard input
- > All software is on card. No disk required.
- > Change CRU address base via switches
- > Review module library from main menu

Available: NØW

$249.50 US FUNDS

with the GPL Package: $310

99 MOUSE · w/ software	$98
Extended Basic II plus	$75
128k Stand-alone memory ß printer port incl	$149
MAXIMEM	$145

TI DOS w/ icon interface $25

and AVAILABLE VERY SOON:

80 Column Card - 'Library' Card - Internal 32k w/ battery
New module Command Centre.
GPL Memory Module .... and more!

Fully compatible with TI, CorComp and Myarc disk controllers. Switch selection ensures compatibility with all current and future expansion cards. Tested with Foundation 128k and Myarc 128k memory cards, Horizon RAMdisk, Myarc and TI RS-232 cards. Now you can access **all** the true power of your TI 99/4A at a remarkable price. Anything you wish can now be accomplished! Download your most used modules. Modify programs to suit your needs. With the imminent 80 column card, you can have a "new" computer **now**, equal to any comparable machine on the market. Place your order today.

VISA

MasterCard

Ryte Data

MILLENNIUM COMPUTERS

210 MOUNTAIN STREET,
HALIBURTON, ONTARIO K0M 1S0

CorComps Triple Tech or Stand alone clock. This package gives you three independent timers, text readouts, 12 or 24 hour mode w/ AM & PM function, independent week/date/time set AND two interrupt driven utilities to allow constant display of the time or user called time display. Runs under Extended Basic at assembly speed!
PRICE: $17.95 Disk and booklet.

ORPHAN CHRONICALS:
by Dr. Ron Albright Jr.

[Available through Millers Graphics, 1475 W. Cypress Ave., San Dimas, CA 91771 (714) 599-1431]

This is a book that will interest any TI 99/4A owner. Dr. Albright has done a great deal of research and valid interpretation of the events, people, cause and effect surrounding the rise and "fall" of our machine.
The book chronicals 172 pages of good, solid information rarely found in one source. With ten chapters and 56 pgs of appendices, TI owners will find a lot of interesting reading and various "survival" tools.
He starts out by noting that there are no heros or villians in the book and that it is an account of facts with his own interpretation thereof.
Chapter One details the 1979/80 debut of the 99/4 and the 99/4A upgrade. Detailed are the computer wars of 1982 right up to "Black Friday" October, 1983 when TI pulled the plug.
Chapter Two reveals the aftermath of the announcement to orphan the 4A by TI's corporate heirarchy.
Chapter Three provides a look at commercial users groups. Here is where I would interpret things slightly differently. Albright fairly roasts the International Users Group and later is more lenient with Home Computer Magazine.
Chapter Four presents the real users groups - the bright souls who have contributed more the the survival of the 99/4A than anything else to date.
Chapter Five discussed the growing telecommunications phenomena... one that tends to run ones phone bill way over the limit! (Ron is a sysop on Compuserves TI FORUM).
Chapter Six poses an question of "SUPPORT? FROM WHERE?". TI owners are of the 'once burned - thrice shy' variety... from "Phoenix to 99/128" the rumours have run their course. Here Ron covers several companies and does a little roasting of CorComp, Myarc and Ryte Data (yours truly!) for announcing and/or publishing "new computer" information before any [illegible] machine (was) available. Then again, Dr. Albright doesn't believe a new computer will appear.
Chapter Seven covers the publications which have support the TI. Ron never saw this newsletter until last week but he covers most of the others. He also has missed TI REVUE from West Germany which publishes some of the best hardware articles and software listings I have ever seen.
Chapter Eight goes into Freeware pros and cons for our community.
Chapter Nine is "What the Future May Hold"... something that the computer industry is really all about in the first place. Ron Albright really shines in this chapter. He defuses a lot of the misery syndrome many TI users exhibit. As one source noted, even if 1,000 machines go into the closet every day, it will take ten years before the final TI 99/4A is finally and completely "dead".
Chapter Ten winds up a good book with a survival treatise on what to do, where to find support and a proper orphans attitude. Commendable. Suggested reading all the way around.

Thanks to Craig Miller for giving us a copy of the Orphan Chronicals to review. AVAILABLE FROM MILLERS GRAPHICS, 1475 W. Cypress Ave., San Dimas, CA 91773 : $9.95

LA cont'

in various TI modules as well as the TI 99/4A console operating system.

It was really nice to meet people in Los Angeles before, during and after the show. A great deal of discussion centred around the piracy issue in LA; some programmers are considering leaving the software end of the TI market due to the fact that piracy runs rampant. Others maintain that it is

With approximately 1,000 people attending the show, the L.A. Users Group plans to host another TI Fest-West '87 in Los Angeles. There were also discussions about hosting a show in Australia in late 1986. We'll keep you posted!

Program Manager

© 1986 John D. Keown

AT LAST! a computerized organizational tool that REALLY WORKS!

Some of Program Manager's outstanding features:

— written entirely in assembly language

— organize, categorize, access, **load & run over 11,000** assembly language programs almost instantly

— all prompts are very user friendly

— all menus are totally user designed

— PROGRAM MANAGER resides in computer memory until system shutdown, "QUIT" will not dump the program

— user definable automatic disk drive search — in ANY order

— will support and search up to 5 disk drives in ANY configuration (SS/SD, DS/SD, DS/DD etc.)

— will support Myarc's 128 K or 512 K Memory Expansion Cards

— user definable screen color display

— PROGRAM MANAGER supports almost all commercial and freeware assembly language programs

Program Manager's requirements:

Required:

— TI 99/4A console
— 32 K Memory Expansion
— single disk drive
— **6000+ module**

Optional:

— Myarc's 128 or 512 K Memory Expansion Card
— multiple drives in any configuration
— Cartridge Port Expander ("Widget" by Navarone Ind.)

Software and 6000+ module

$69.95

Software only

$25.95

Exclusive Distributor:

DEALER INQUIRIES INVITED

PILGRIM'S PRIDE • 5 Williams Lane • Hatboro, PA 19040 • (215) 441-4262

NEW JERSEY : MYARC!

The New Jersey TICOFF Show was quite different than the LA Fest West in several points. Held in Roselle Park High School, TICOFF had a definite advantage with organizational help and school facilities. It did not seem to be as well attended as the LA show.
There were also a number of other vendors selling Apple and IBM gear - although the majority seemed to be TI dealers and exhibitors. Media coverage slated for TICOFF did not take place for different reasons. The range of new products introduced was less extensive than those shown in LA. More user group members and representatives were in attendance to see the Myarc computer. One new product shown was a Program Manager by John Keown which will organize, categorize, access, load and run over 11,000 assembly programs. This program is very impressive! It resides in memory until power down, will search any drive in any order and supports all popular drive types. The program requires a "6000+ module", 32k and drive(s).
Available for $69.95 from Pilgrim's Pride, 5 Williams Lane, Hatboro, PA 19040 (215) 441-4262.
UPDATE: The reason this issue is late --- MYARC SHOWED A WORKING 9995 COMPATIBLE COMPUTER APRIL 5TH.!!!
(Finally, at last; in public)
We trust that this won't dismay too many people who have been waiting for the past year. If you just can't live without a new machine, yes, they did actually come through after all.

The place was at the New England Computer Faire. There have been some conflicting reports as to the status of the machine; one being that a software problem has to be fixed and one being that a chip was blown on the board. Chris Bobbit informed me that the motherboard was a production type (NOT A WIRE WRAPPED PROTOTYPE) and was fully socketed. Apparently the machine will be a standard 512k and is designed to fit the PE Box.

More later folks.

The New Jersey Users Group must be well commended for the enormous amount of time and effort which went into the show. See you again next year!

SUPER LOAD

This project is the "SUPER LOAD" button mentioned last issue. It is an improvement on the Load Interrupt switch published last year. This version uses two chips: one 74LS00 and one 74LS74AN plus two logic gates a one diode as shown in the diagram.
The advantage here is that you can RETURN to the calling program that is being analyzed. This allows you to jump into "DEBUG" (or another utility set up with the correct vectors at FFFC=WP and FFFE=PC), examine your program in main memory and return to the running program!

First you must load the DEBUG program of the Editor Assembler package using option 3. Load & Run DSK1.DEBUG at the prompt. The program sets the correct vectors at which point we exit DEBUG.
Then you run the program: Assembler, Basic or Extended Basic which you want to analyze. When you depress the LOAD button and release it, the circuit performs a LOAD instruction exactly synchronized with the system. One (and only one) button press is recognized. The system jumps to DEBUG and passes control from your program to DEBUG. You can then examine in detail all t registers, single step through the ma... program, change any data etc.
When you are through analyzing the code in this way, exit DEBUG by typing "0" and hit "ENTER" to continue with the master program.

Thanks to Guy Gournay

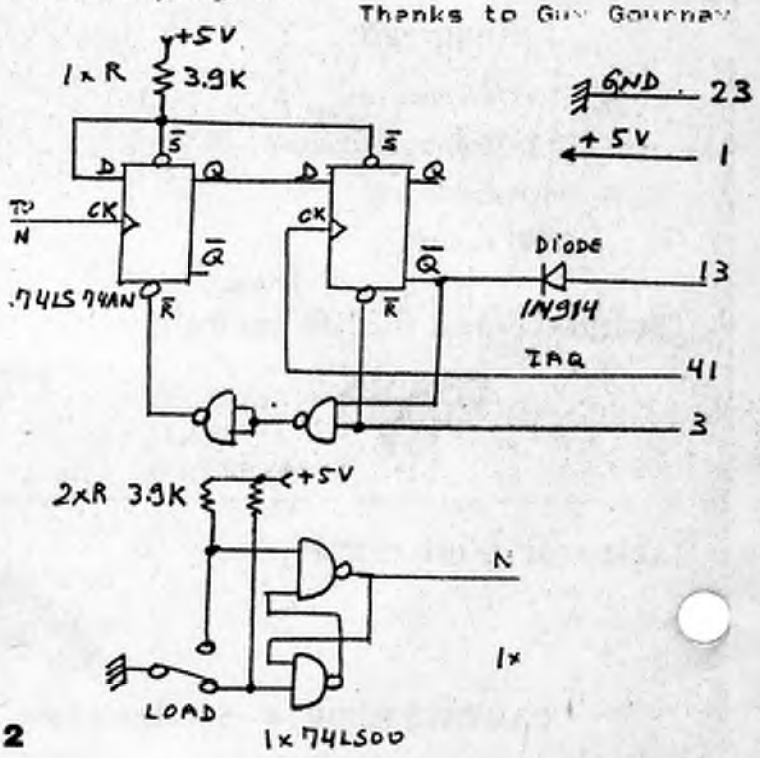

Expand your TI-99/4A™ to RGB

- Bright, sharp graphics in TI's palette of 16 computer generated colors.
- Easy-on-the-eyes, crisp alpha-numeric characters.
- No more "herringbone", "computer hash" or other outside interferences.
- Eliminate "rainbow", the color distortion on vertical edges of graphics and text.

DIJIT Systems RGB Conversion Kit brings professional quality display to your TI-99/4A.

DIJIT Systems
4345 Hortensia St.
San Diego, CA 92103
PHONE: (619) 295-3301

DIJIT SYSTEMS
SAN DIEGO CA USA

PE BOX SPEECH:

The photograph below is of a project to install the Speech Synthesizer board on a card for the Peripheral Expansion Box.

As you can see, this is a prototype design done on perf board and hand wired. The designer reports that the project took several hours of hard work just to get it working properly. The addition of a few chips and connectors is needed to install the speech board. The board installs in any open slot in the PE BOX and functions just like a separate unit. One very possible approach would be to add this design to one of the more innovative boards as a kit project or a new product.

Jack Miller, 2990 Maidstone Ave., Trenton, Michigan 48183 would like response about selling the plans or any comments from interested owners.

POLITICS

One of the "stranger" aspects of the TI community is that of politics. Ranging from comments to fairly hostile actions, this causes the level of support to diminish.

It strikes me as unusual for some in an orphaned group to engage in killing off what little support exists from retailers and companies struggling to provide products and service. I suppose it has something to do with being left high and dry by Texas Instruments over two years ago.

The price wars, dwindling sales for certain products and political actions which evolve ultimately hurt owners.

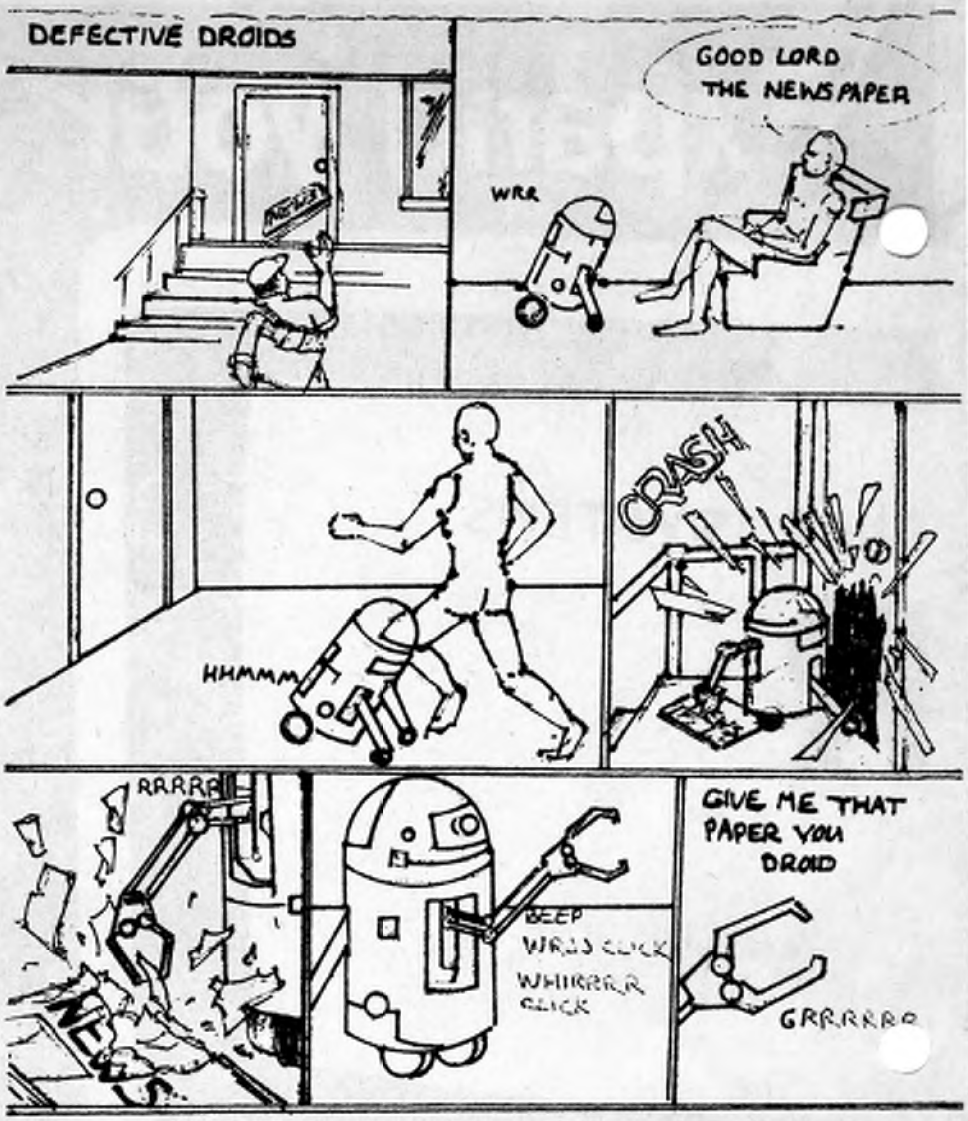

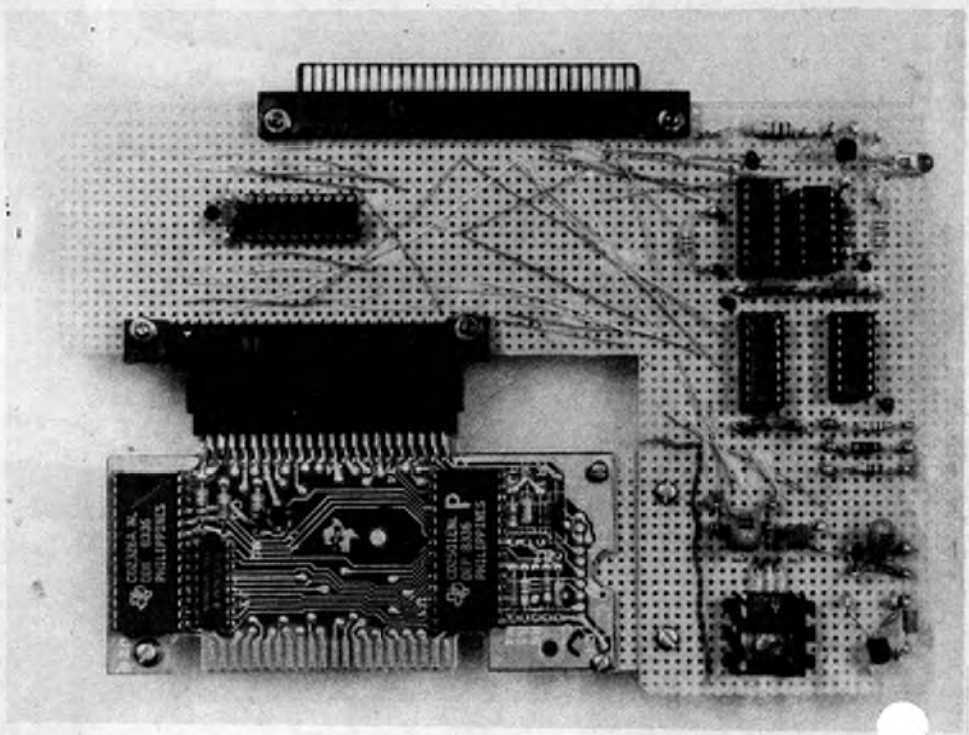

☆ QUALITY 99 SOFTWARE

Program	Description	Reg.
BANNER MAKER	print large signs, horizontally or vertically	19.95
DISK LABELER	print disk catalog on mailing label, stick it on disk	19.95
DRAW 'N PLOT	draw on screen in bit-map mode, print in normal or full page size	39.95
QUICK-COPYER II	backup disks in 3 passes or less, un-fracture files	19.95
SOFTKEYS	define your own function keys, up to 140 characters each	29.95
CHART MAKER	turn numbers into impressive bar graphs & pie charts	29.95
SDUMP II	print the screen of programs & modules, very fast	29.95
DISK MANAGER IV	the only RESIDENT disk manager program	39.95
QS-WRITER	run TI-WRITER with Ex. BASIC module	19.95
LIBRARIAN	print an alphabetized catalog of all your disks	19.95
DATA BASE 99	an easy-to-use, fast, friendly, menu-driven, filing system	39.95
EZ-LOADER	shows menu of pgms on disk, load & run pgm with 1 key press	19.95
XB-FORTH	run TI-FORTH with Ex. BASIC module	19.95
DUPLICATOR	copy a disk in only 2 passes, including most protected disks	19.95
QUICK-CATALOGER	a resident disk catalog program	19.95
QS-CONVERTER	convert a text file into a running program	39.95
QS-XREF	get a full cross-reference listing, in ONLY 2 minutes!	19.95
QS-ASSEMBLER	assemble Assembly Language programs with Ex. BASIC module	19.95
LOGO-LISTER	print Logo procedures on a PIO or RS232 printer	19.95
QS-RAMDISK	a true 127 file RAM disk for the Foundation 128K card w/DSR option	49.95

QUALITY 99 SOFTWARE
1884 Columbia Rd. #1021
Washington DC 20009-5161

GUERILLA MARKETING:

Publication of a newsletter is not an easy task; nor is it assured success. Many users groups have noted that the costs to publish a large newsletter have been too much for the group to bear. Running such a venture as a business is even more costly. There are factors which limit the impact and audience.

Most notable is that of marketing: how does one reach a significant portion of the potential TI owners who are interested? On this level it is a matter of "word of mouth" - where one person tells another. In fact, the majority of recent new subscribers are referrals at this point. Makes sense... and provides the stuff of survival.

Do you like what you've read in this issue? Would you like to see it grow and encompass more news, features, longer articles, detailed projects, programs etc.?

Here's an appeal to assist the growth of R/D Computing: tell a friend. Pass the word along to other owners. Encourage a new subscriber. Give our address to your local users group as a source of information for the TI99.

This is an exercise in guerilla marketing. We rely on increasing our subscription base to grow. A very specific number is required to provide more service - a much larger number is needed to expand into a full scale format.

Thanks in advance!

EPROMMER

Following is the EPROM burner project we mentioned previously. This EPROMer is used in conjuction with the Extended Basic module. It allows the storage of data from any RAM memory region onto an EPROM (Erasable Programmable Read Only Memory) chip. The EPROM programmer is controlled by the enclosed assembly language software listing. The code loads into the lower 8k memory so that the upper 24k bank is available for your programs.

It is also possible to load the tagged object code generated by the GPL Assembler into high memory and program an EPROM with the code to create a "TI type" module which will access the GPL interpreter in the 99/4A console. There are several module board designs which have been used for EPROMs by third party companies.

Requirements: 32k memory expansion, one disk drive, the completed project and a power source of 25 volts DC.

EPROMS are also very useful as pin compatible replacements for ROMs in peripheral cards for the 4A. You can, for example, modify the TI disk controller to write more tracks per inch on a diskette. It is also possible to develop EPROM based DSR routines for specialized cards designed to fit the PE Box.

Parts required: a 28 pin Zero Force Insertion socket for the EPROMs, an 18 pin connector (dual sided) for the Extended Basic module
2 X 74LS00
1 X 74LS85
1 X 74LS155
1 X 74LS251
2 X 74LS259
1 X 74LS299
one REED RELAY for current levels in programming the chips, 4 DIP switches to select EPROMs: 2516/ 2716, 2532, 2732, 2764/27128
4 control LED's
1 RESET button.
Supply voltage to the card with a suitable supply - 12.5v to 25v MAXIMUM 30mA depending on the type of EPROM being programmed.
NOTE: all voltage switches **MUST** be turned off before a new EPROM selection is made to avoid damage to the EPROM or

```
        DEF EPROM
VSBR    EQU >2028
VSBW    EQU >2020
VMBW    EQU >2024
KSCAN   EQU >201C
DATEN   EQU >1900
ADRES   EQU >1910
TIM     EQU >13
DRD     EQU >14
PGM     EQU >15
TIME    EQU >10B0
GWNWS   BSS 32
FLAG    BSS 2
STRING  BSS 4
RAMSTA  BSS 2
RAMEND  BSS 2
EPRSTA  BSS 2
OFFSET  BYTE >60
NOKEY   BYTE >FF
B       BYTE 'B'
E       BYTE 'E'
V       BYTE 'V'
P       BYTE 'P'
Y       BYTE 'Y'
N       BYTE 'N'
R       BYTE 'R'
F       BYTE 'F'
TABLE   DATA >3000,>3101,>3202
        DATA >3303,>3404,>3505
        DATA >3606,>3707,>3808
        DATA >3909,>410A,>420B
        DATA >430C,>440D,>450E
        DATA >460F,>0000
LEER    TEXT '                                '
TEXT0   TEXT 'EPROM-Burner (Jun;12/84)'
TEXT1   TEXT '16k-EPROM?  (Y/N)       '
CURSOR  BYTE >1E
TEXT2   TEXT 'RAM start address     >'
TEXT3   TEXT 'RAM last+1 address    >'
TEXT4   TEXT 'EPROM start address   >'
TEXT5   TEXT 'Read FF? Prog V''fy Back'
TEXT5F  TEXT ' Exit'
TEXT6   TEXT '    '
TEXT7   TEXT 'okay'
TEXT8   TEXT 'error: not empty'
TEXT9   TEXT 'error: not equal'
DELAY   LI R14,>4000          *DELAY LOOP
L1      DEC R14
        JNE L1
        RT
CLEAR   LI R0,>2FF            *CLEAR
        LI R1,>8000           *SCREEN
L2      BLWP @VMBW
        DEC R0
        JNE L2
        RT
TXTWR   MOV *R11+,R0          *WRITE
        MOV *R11+,R1          *TEXT
        MOV *R11+,R2
        BLWP @VMBW
```

```
KEYLOP  MOV R11,R10          *SCAN
L3      MOVB @CURSOR,R1      *KEYBOARD
        BLWP @VSBW
        CLR @>8374
        BLWP @KSCAN
        CB @NOKEY,@8375
        JEQ L3
        MOVB @8375,R1
        BL @DELAY
        B *R10
CHECK   LI R2,TABLE-2        *CHECK
L4      INCT R2              *INPUT
        CLR R9
        MOVB *R2,R9
        JNE L5
        MOV *R11,R11
        RT
L5      CB R1,R9
        JNE L4
        INCT R11
        RT
ADRE    MOV R11,R8           *ADDRESS
        LI R5,STRING         *READ FROM
        LI R4,4              *STRING
TASTE   BL @KEYLOP
        BL @CHECK
        DATA TASTE
        MOVB R1,*R5+
        AI R1,>6000
        BLWP @VSBW
        INC R0
        DEC R4
        JNE TASTE
        B *R8
HEXA    MOV R11,R10          *BUILD
        LI R4,4              *HEX-ADDRESS
L6      MOVB *R3,R1          *FROM STRING
        BL @CHECK
        DATA $+2
        INC R2
        MOVB *R2,*R3+
        DEC R4
        JNE L6
        CLR R3
        MOVB *R6+,R3
        SLA R3,4
        AB *R6+,R3
        MOVB R3,*R7+
        MOVB *R6+,R3
        SLA R3,4
        AB *R6,R3
        MOVB R3,*R7
        B *R10
EPROM   LWPI OWNWS           *PROGRAM
        MOV @LEER,R1         *START
        CI R1,>2020
        JNE L8
        LI R1,LEER
L7      AB @OFFSET,*R1+
        CI R1,LEER+204
        JL L7
L8      BL @CLEAR
        BL @TXTWR
        DATA 1,TEXT0,24
L9      LI R12,ADRES
        CLR R7
        LDCR R7,0
        BL @TXTWR
        DATA 97,TEXT1,23
L10     CLR @>8374
        BLWP @KSCAN
        CB @Y,@>8375         *16K-EPROM?
        JEQ L11
        CB @N,@>8375
        JNE L10
        SETO @FLAG
        MOVB @N,R1
        JMP L12
L11     CLR @FLAG
        MOVB @Y,R1
L12     LI R0,119
        AI R1,>6000
        BLWP @VSBW
        BL @TXTWR
        DATA 183,TEXT6,4
        BL @TXTWR
        DATA 161,TEXT2,22
        A R2,R0
        BL @ADRE             *RAM START
        LI R3,STRING         *ADDRESS
        MOV R3,R6
        LI R7,RAMSTA
        BL @HEXA
        BL @TXTWR
        DATA 247,TEXT6,4
        BL @TXTWR
        DATA 225,TEXT3,22
        A R2,R0
        BL @ADRE             *RAM END+1
        LI R3,STRING         *ADDRESS ?
        MOV R3,R6
        LI R7,RAMEND
        BL @HEXA
        BL @TXTWR
        DATA 312,TEXT6,4
        BL @TXTWR
        DATA 289,TEXT4,22
        A R2,R0
        BL @ADRE             *EPROM START
        LI R3,STRING         *ADDRESS ?
        MOV R3,R6
        LI R7,EPRSTA
        BL @HEXA
        BL @TXTWR
        DATA 417,TEXT5,28
TASK    LI R12,ADRES
        SBZ DRD              *NEXT
        SBZ PGM              *TASK ?
        SBZ TIM
        MOV @FLAG,@FLAG
        JEQ $+4
        SBO TIM
        MOV @RAMSTA,R6
```

DISkASSEMBLER

THE SMART DISK OR MEMORY DISASSEMBLER

* ALLOWS YOU TO DISASSEMBLE DIS/FIX 80 OR PROGRAM IMAGE FILES, CONTAINING 9900 ASSEMBLY CODE, RIGHT OFF THE DISK OR TO DISASSEMBLE MEMORY.

* OUTPUTS AN 80 COLUMN DISPLAY, COMPLETE WITH SOURCE CODE, OPCODE DATA, TEXT AND ADDRESS, FOR EACH INSTRUCTION TO ANY STANDARD DEVICE. UP TO 3 OUTPUT DEVICES CAN BE ON AT ONCE AND THEY CAN BE TURNED ON AND OFF AT WILL.

* GENERATES FULLY LABELED SOURCE CODE ON THE SECOND PASS, COMPLETE WITH REFS, DEFS, EQUATES AND A SYMBOL TABLE LISTING.

* EASILY HANDLES DATA, TEXT AND DATA FOLLOWING SUBROUTINES AND IT AUTOMATICALLY SPLITS UP DATA OR TEXT BLOCK AND INSERTS LABELS AS NEEDED AND IT AUTOMATICALLY HANDLES THE DATA FOR BLWPS.

* GENERATES SOURCE CODE THAT IS 100% READY FOR RE-ASSEMBLY FOR MOST FILES WITH VERY LITTLE, IF ANY, EDITING.

* CONTAINS AN AUTOMATIC DSR DISASSEMBLY OPTION WITH CRU BASE SELECTION, A REGISTER OPTION, AN EXTENDED LABEL CHECKING OPTION, A TEXT BEFORE DATA OPTION, AND A BASIC BIAS OPTION.

* ALLOWS RETRO SCREEN CAPTURE TO ANY STANDARD OUTPUT DEVICE.

* AUTOMATICALLY GENERATES A SEPARATE REF, DEF AND EQUATE FILE FOR YOU, SO YOU CAN SIMPLY ADD THE NECESSARY COPY DIRECTIVES TO IT FOR EASY REASSEMBLY.

* IT'S SO FRIENDLY IT EVEN PUTS THE END DIRECTIVE IN FOR YOU.

DISkASSEMBLER

THE PERFECT COMPLEMENT TO ADVANCED DIAGNOSTICS AND EXPLORER FOR THE SERIOUS PROGRAMMER!

ORDER NO. UT03 PRICE 19.95

MILLERS GRAPHICS
1475 W. Cypress Ave.
San Dimas, CA 91773
U.S.A. EARTH

```
        MOV @EPRSTA,R7
        CLR @>8374
L13     LI R0,446
        LI R1,>7E00
        BLWP @VSBW
L14     BLWP @KSCAN
        CB @NOKEY,@>8375
        JEQ L14
        LI R0,446
        LI R1,>8000
        BLWP @VSBW
        BL @TXTWR
        DATA 449,LEER,23
        BL @TXTWR
        DATA 545,LEER,23
        LI R1,>9D00
        CB @R,@8375       *READ CONTENTS?
        JNE ASKF
        B @READ
ASKF    CB @F,@>8375      *FLUSH
        JNE ASKE
        B @FFTST
ASKE    CB @E,@>8375      *PROGRAM END?
        JNE ASKV
        LI R12,ADRES
        CLR R7
        LDCR R7,0
        CLR @>837C
        LWPI >83E0
        B @>0070
ASKV    CB @V,@>8375      *COMPARE?
        JEQ VERIFY
        CB @B,@>8375      *BACK TO THE
        JNE ASKP          *START OF THE
        BL @DELAY         *SCREEN PROMPT?
        B @L9
ASKP    CB @P,@>8375      *PROGRAMMING?
        JNE L13
        B @PROGR
READ    LI R0,449         *READ EPROM
        BLWP @VSBW        *CONTENTS
L15     LI R12,ADRES
        SBO DRD
        LDCR R7,13
        INC R7
        LI R12,DATEN
        STCR *R6+,8
        C @RAMEND,R6
        JNE L15
        B @TASK
VERIFY  LI R0,463         *COMPARE EPROM
        BLWP @VSBW        *CONTENTS WITH
        CLR R9            *RAM CONTENTS
        CLR R10
L16     LI R12,ADRES
        SBO DRD
        LDCR R7,13
        LI R12,DATEN
        STCR R9,8
        MOVB *R6+,R10
        C R9,R10
        JEQ L17
        LI R12,ADRES
        SBZ DRD
        BL @TXTWR
        DATA 545,TEXT9,16
        B @TASK
L17     INC R7
        C @RAMEND,R6
        JNE L16
        LI R12,ADRES
        SBZ DRD
        BL @TXTWR
        DATA 545,TEXT7,4
        B @TASK
FFTST   LI R0,454         *TEST, IF EP
        BLWP @VSBW        *IS FLUSHED
        MOV @RAMEND,R1
        S @RAMEND,R1
        A @EPRSTA,R1
        MOV @EPRSTA,R2
L18     SETO R8
        LI R12,ADRES
        SBO DRD
        LDCR R2,13
        LI R12,DATEN
        STCR R8,8
        INV R8
        JEQ L19
        LI R12,ADRES
        SBZ DRD
        BL @TXTWR
        DATA 545,TEXT8,16
        B @TASK
L19     INC R2
        C R1,R2
        JNE L18
        LI R12,ADRES
        SBZ DRD
        BL @TXTWR
        DATA 545,TEXT7,4
        B @TASK
PROGR   LI R0,458         *PROGRAM
        BLWP @VSBW        *EPROM
        LI R12,ADRES
        SBZ TIM
        SBO PGM
L20     CLR @>8374
        BLWP @KSCAN
        CB @B,@>8375
        JNE L21
        B @TASK
L21     LDCR R7,13
        INC R7
        LI R12,DATEN
        MOVB *R6+,R8
        LDCR R8,8
        LI R12,ADRES
        SBO TIM
        DEC R10
        JNE $-2
        END
```

possible damage to your console!
****

AS USUAL, THIS PROJECT IS DONE AT YOUR OWN RISK.

****

Credits: Circuit and program ideas from TI 16 bit Microprocessor Application book by J. Barschat and an original design for a TMS990/100M EPROMMER. Contributions from K. Hagenbuchner, Traun, West Germany. Published by permission from TI REVUE. Text translated by Henri Schlereth.

This circuit uses the console serial bit CRU I/O channel through the address bus. The data bus is not used.
Data is sent to the CPU bit by bit via the CRUIN line and is transfered from the CPU via CRUOUT.
CRUCLK delivers signals for the data on the CRUOUT line. Simultaneously with the transmission of data bits, the bit address is put on the address bus to activate the EPROM programmer.
The 74LS85 determines if the EPROMMER is being addressed. CRU address >1900 was choosen for this purpose: currently unused by other devices in the TI system. Should any device ever be used that is set for CRU >1900, the conflict can be resolved by altering the EPROM bias address to the A3-A7 address bits. With the aid of address bits A10 - A11, CRUOUT and the 74LS155 it is determinded which of the TTL building blocks shall be active. If the EPROM address needs to be set, both 8 bit 74LS259's are activated. Then 13 address bits are transferred via CRUOUT to the A11- A14 addressed positions. The remaining three bits are used to control the EPROMMER.

To program a 128kbit EPROM requires two steps (full addressing requires 14 bits) with manual setting of the switches.
If the bit values of the data line to the EPROM have to be set, then the 74LS299 is activated and receives the required 8 data bits of information.
If the bit value on the data line of the EPROM needs to be read then the 74LS251 kicks in and sends 8 bits of information to the CPU.
During EPROM programming there is a constant high relative voltage present on the EPROM. As the next address bit is set, it is then followed by the setting of the data bits. The EPROM then receives a programming impulse of 50ms duration. This is standard mode for all EPROM chips.

NOTE: There is no provision for the "fast programming" mode found on certain commercial EPROMers. This mode could be installed easily enough with a patch to the assembly routine to auto-increment data transfer. NOTE 2: Mechatronic has developed an EPROM programmer with additional features and full software control. Used in conjuction with the GRAM card this provides for a complete GPL and TMS 9900 assembly code development system using the 99/4A.

LED DISPLAY:

COLOR	MEANING
RED	PROGRAMMING MODE
YELLOW	PROGRAMMING IMPULSES
GREEN	DATA BEING READ
LIGHT RED	POWER GOING TO EPROM

When the GREEN LED lights, the 74LS251 is going low. If this occurs when turning on the computer, you must push the RESET button because CRUIN is blocked and the CPU cannot execute a full power up sequence. No title screen will appear and the computer will appear to be locked up.

The way this EPROMMER is designed, you can partially program a chip, Read contents into RAM, Test for flush (FF is all bytes), Verify (compare EPROM to RAM), Back (start over) or Exit (QUIT).
START UP:
INSERT EPROM W/ XB MODULE IN PORT
SWITCH 2764 ON CONSOLE ON PRESS RESET
ON EPROMMER INSERT EPROM CHIP SET
SWITCHES CORRECTLY FOR PROGRAM
VOLTAGES. SELECT XBASIC FROM MENU
SCREEN Type: CALL INIT CALL
LOAD("DSK1.EPROM") CALL
LOAD("DSK1.OBJECT") (your code on disk)
CALL LINK("EPROM")

SCREEN WILL SHOW	ENTERED EXAMPLE
16K EPROM (Y/N)	N
RAM STA	>A000
RAM LAST+1	>D000
EPROM START ADD	>0000
READ F+?	F
PROG	P (ON)
PROG	P (OFF)
V'FY	V
EXIT	E

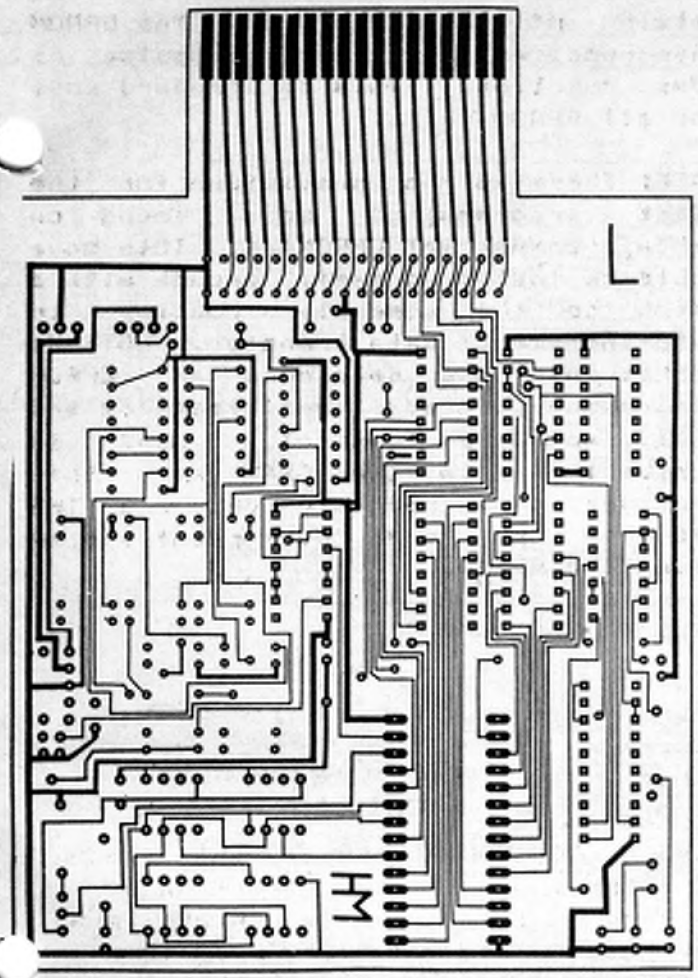

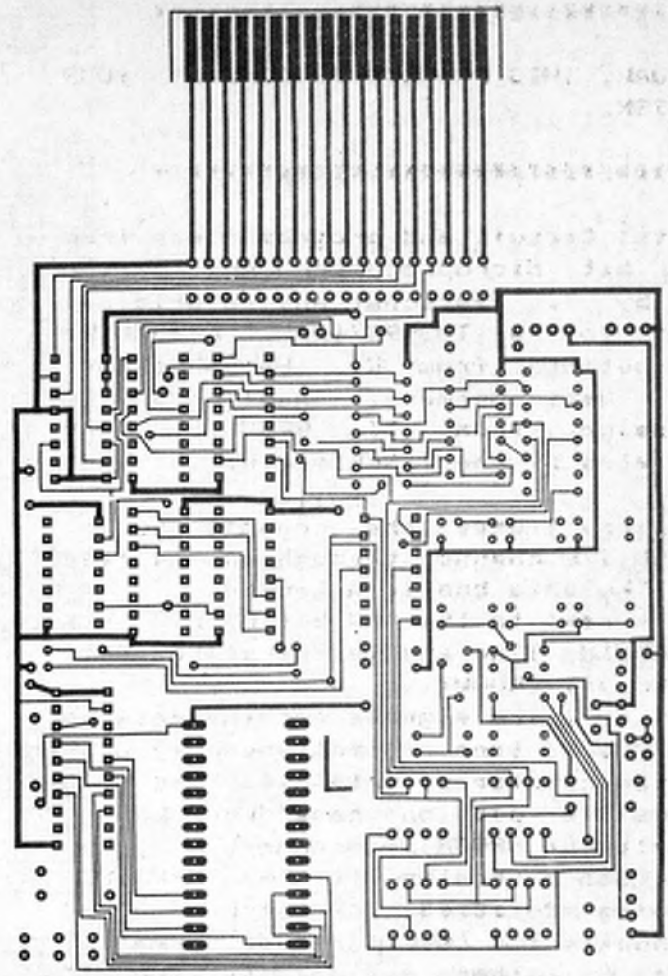

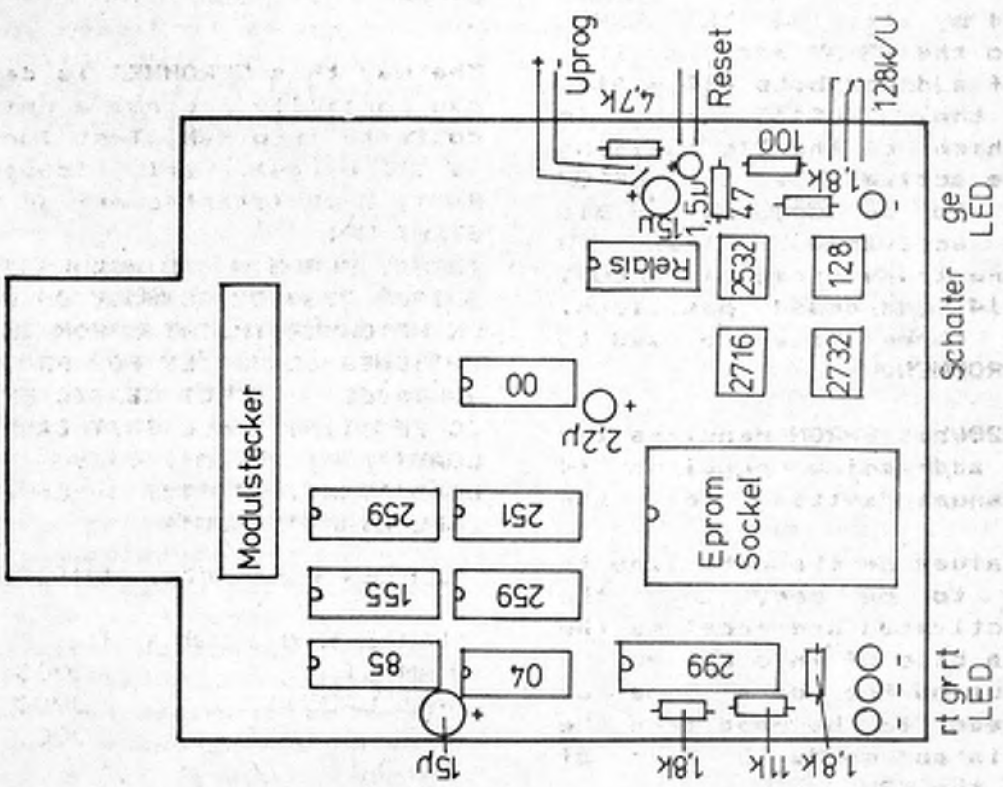
Uprog
4,7k
Reset
128k/U
100
1,8k
1,5µ
47
15µ
Relais
2532
128
2716
2732
Schalter
ge
LED
00
2,2µ
Modulstecker
Eprom
Sockel
259
251
155
259
85
04
299
15µ
1,8k
11k
1,8k
rt gr rt
LED

programs and routines from Jim Peterson of:

Tigercub Software
156 Collingwood Ave.
Columbus, Ohio 43213

Each and every program/file is worth far more than the package price of $30.00 for both disks! Programming skills are shown in a merge file format which accomplish excellent results from TI Basic / Extended Basic. Cassette versions are available for many programs. Extended Basic is required for most of the programs. A catalogue is available for $2.00. Well worth the cost.

EPROMMER continued:

For all you brave souls who get this far, please send us a photo of your project as completed with a formatted disk [mailer too, please!] and we will send you a poke list and object file conversion program. For those of you who cannot build such devices, orders will be accepted for the commercial version from Mechatronic. Better yet, send in the market survey form to give us an idea as to what you really want for your machine.

And for those of you who would like to save some hours of typing, send us TWO disks, a mailer, return postage (loose stamps or an international mailing coupon) and $7.00 for a disk FULL of programs from this and past issues.... PLUS extra public domain & shareware programs in Extended Basic and Assembly. Fair enough?

You should tell us your disk controller type: TI, CorComp or Myarc to get the right format.

Suscribers who took advantage of the $50 offer receive the disks as part of their subscription. Note that future $50.00 (US) disk subscription orders are for THIS YEAR **ONLY!**

[illegible] RELEASE

GEMINI PRINTER OWNERS "JOY-PRINT" IS HERE !!

JOY-PRINT A "COPYRIGHTED" PROGRAM, COMBINES THE POWER OF THE TI/994A WITH THE EXCEPTIONAL GRAPHICS OF THE GEMINI 10X/15X PRINTERS. PRINTER GRAPHICS WITH THE FLICK OF YOUR WRIST. NO MORE HOURS OF FRUSTRATING PROGRAMMING FOR ONE SMALL PICTURE. DRAW ON SCREEN WITH JOYSTICK, ERASE ALL OR PART OF PICTURE AND CONTINUE DRAWING. REPEAT PRINT LOOP, DOUBLE STRIKE CAPABILITY, USE ONE OF OVER 180 PRINT CHARACTERS. USE FOR BUSINESS LETTERHEADS, PERSONALIZED STATIONERY, OR JUST FUN FOR THE KIDS.
WORKS ON BOTH SERIAL AND PARALLEL PORTS.

COST ONLY> CASSETTE=$10.95 DISK=$12.95
REQUIRES, JOYSTICK, X-BASIC, TI99/4A, CASSETTE OR DISK, GEMINI 10/X OR 15/X PRINTER.

CHECK OR MONEYORDER TO:
FENNELL SOFTWARE
4365 COMFORT STREET
COCOA, FLORIDA 32927
WE SHIP FIRST CLASS MAIL, POSTAGE PAID BY FENNELL SOFTWARE

MAIL-LIST stores up to 400 records. Sort by name. Search by part of last name. Print labels & listings. Entire program loaded into memory eliminating numerous disk changes. Requires TI-99/4A, XBASIC, disk drive, 32K mem. Printer optional. Write: K.G. Mori, 181 Atlantic Avenue, Winnipeg, Manitoba, Canada R2W 0P7

Some preliminary discussions have been tendered relating to a consortium of hardware and software companies that support our machine. The basic idea being a pooling of knowledge and resources to bring new products to market. With the continuing secrecy of Texas Instruments, this would place many small companies in a position of sharing information on an openly co-operative basis.

This seems to be a step in the right direction for the loyal TI community. Consider that the grip Texas Instruments had on their machi[illegible] software, hardware and informati[illegible] placed owners in a very tight spot. The legendary third party simply didn't exist the same way as it does for Big Red or Big Blue. If either one of

these companies orphaned their mainstream computers, owners would have a viable third party support system to rely on.

Virtually none of the third party companies have the resources to address a significant section of the 99 owner base.

A consortium would allow support companies to develop more products for the 4A and REACH the market in a more effective manner.

Comments?

MARKET SURVEY:

As you may have guessed from the odd comment, veiled and the not- so-veiled hints, Ryte Data has some projects in the progress...

To carry these out, a response from subscribers and non-suscribers alike is NEEDED.

Your investment is a few minutes, an envelope and a lowly stamp... your return on investment takes the form of kits, new products, larger publication format and software.

Your name & address are not requested or required (unless you have a reason ie: questions, need for product info etc.)

Is your 99 expanded? ___
TI__ CorComp__ Myarc__ Standalone__
w/32k__ 128k__ 512k__ RS-232__
Printer?___ Type_____
Disk drives?____ Type_____
Number of cartridges_____
Number of disk software packages___

Weekly use of your system ____ hrs

Subscriber to database/BBS?____

Other computers?___ Brand_____
Use computer at work?___

Member of users group?___

Are you interested in newsletter projects as kits? ___ Products? ___

What new products would you like to see for your 99/4A? _____

_____

_____

DO YOU PLAN ON BUYING THE MYARC 9995 COMPUTER? ____
(Provided it becomes available!)

At what price? ___ What memory____
Should this machine run IBM or Apple software?___
If you do not have an expansion unit would you buy one to hold the Myarc computer-on-a-card?____
At what price? _____
Do you feel software to use 512k or more of main memory is worth extra cost?___ Maximum price?_____

How important is the open information policy for a new machine?
_____

_____

Do you feel the new products being introduced for the TI/994A help the computer survive?___ Do you plan to purchase new hardware?___
New software?___

If you have a basic console would you buy an internal 32k memory?___

Would an expanded memory 99/4A be worthwhile?_____

Should a new keyboard be added?___

Does an expanded memory module(40k) interest you?___ At what price?____

As announced previously, we are going into production on a "GPL Memory Module" that gives you the capability to load 8k programs into memory on a card for the module port. This unit can hold up to 16k worth of programs on an EPROM and can be expanded to 40k of RAM memory. The expected prie is $70.00 US with an EPROM program to load & run GPL, Assembly and other user applications. Various utility programs will be supplied with the Memory Module to take advantage of the 24k to 56k of memory.

We require a market survey which indicates how many people would buy such a device. It you would like a Memory Module, please send us an advance order with your name and address. These will be produced on a first-in first-out basis. DO NOT SEND ANY MONEY. Just your order.
We will then inform you when the products are ready to ship.

SUSCRIBE NOW to receive each new issue. Copies are mailed during the fourth week every month to suscribers. The data shown on each cover is for the month PAST ie: JAN 1986 is published at the end of January. Back issues are available as follows:

V 1.2 Load Interrupt Switch
E/A 8k module upgrade

V 1.3 TMS 9995 Memory map & specs
numeric keypad project & etc.

V 1.4 Extended Basic plus by Apesoft
Myarc 128k card
Auto-fire project & etc.

V 1.5 32K internal memory upgrades
DS/DD Ramdisk
Auto power-up project

V 1.6 Myarc 256k Computer
"C" Compiler
128k 'console only' memory unit
RAM/GRAM card

V 1.7 MAXIMEM review
EPROM burner
Schedule Manager review
Sense & Control card

1986 Subscription price: $14.00 US funds including First Class Delivery. Add $3 foreign

Back Issues are available to subscribers only. Price: $2.00 each. Add $1.00 postage US & Canada. Add $2.00 overseas. For Special Delivery AIRMAIL add $4.00.

R/D Computing is published monthly by Ryte Data in Haliburton, Ontario. Copyright 1985. All material contained herein is taken from sources believed to be accurate. No responsibility errors, omissions or misprints is assumed. Articles may be reprinted with credits by users groups for publication.

Articles dealing with Texas Instruments 99/4A and 9900 based computers are published. Special attention is given to data on upgrading and modifying the 4A console & system. Information and material for consideration is solicited from owners, users groups, hardware manufacturers, software publishers etc. Please send all correspondence to Ryte Data R/D, 210 Mountain Street, Haliburton, Ont. K0M 1S0 Canada. We cannot accept responsibility for materials submitted and, unless stated otherwise, will assign all manuscripts, letters etc. for publication. ONLY Manuscripts with sufficient postage and self/addressed mailer will be returned.

In two issues (March) we are setting up a new un- classified ad section. Cheap rates at $1.25 per 40 character line. Send copy to our address with payment. Count all the characters, spaces etc. Ads will be run according to order received. Deadline date is the 21st of each month.

Ryte™ Data
BOX 210 MOUNTAIN STREET
HALIBURTON, ONTARIO K0M 1S0
CANADA